LED 1x4 Panel

LED Flat Panel 1x4
40 Watt 4000 Lumens 5000K

Electrical	
Watt	40
Voltage	120-277V
Min. Start Temperature	-40°C
Max. Operating Temperature	40°C
Driver Type	Class2
Driver Output	27-42V Direct Current
Dimming	0 – 10 Volt
Light	
Initial Lumens	4000
Lumens per Watt	100
Color Temperature	5000K
Color Rendering (CRI)	80
Beam Angle	150°
Agency Approvals	
DLC	Pending
FCC	Yes
ETL	Yes
Product Details	
Housing Material	Extruded Aluminum
Lens Material	Acrylic
Warranty	5 years
Rated Life	50,000 hours

Product Description

The 1x4 LED Panel light is constructed using an extruded aluminum frame with a high quality PMMA light distribution panel combined with an attractive acrylic lens that achieves a wide light distribution pattern. The use of PMMA assures that the LED light panel will not yellow over time. EarthTronics guarantees the lens against yellowing for the life of product.

This 1x4 panel features 120-277V dual voltage operation and is equipped standard with a 0 - 10 Volt continuous dimming driver that works with any standard 0 - 10 Volt control/dimmer. The 5000K light and high 82+CRI provides a daylight solution.

These Panel lights are ideal for use in offices, schools, healthcare, and many other commercial applications. IC rated.

LED Panels feature

- Solid construction frame is suitable for pendant mounting.
- Earthquake clips are standard on each panel light.
- 120-277VAC operation with 0-10V dimming is standard.
- PMMA light distribution panel evenly distributes the light across the face of the panel and does not yellow over time.
- Acrylic lens provides an attractive appearance and wide light distribution.
- Emergency back-up driver system is available, contact EarthTronics for details.

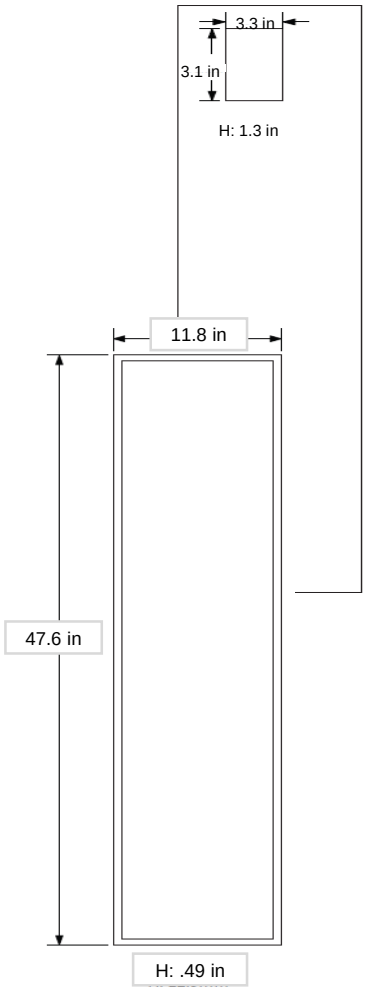

Order Code: 10625 – 2pk
10624 – 1pk

- **Important ordering note**: Please order in 2-packs. Only order single packs when an odd number of Panel Lights is required on a job site.

DLC Product ID: PEJJEKKW

Model: L3FP1X44050D

Accessories (Ordered Separately)

- Surface Mount Kits 2x4 – Order Code: 10459
- Wire Hanger Kit 2x4 - Order Code: 10464

EarthTronics 380 W. Western Ave, Suite 301 Muskegon, Michigan 49440
PH 231.332.1188 **Toll Free** 866.632.7840 **Fax** 231.726.5029
www.earthtronics.com

Revised 2/27/2019